Round 4 - Sunday, February 20, 2022

SHOTLINK

LECOM Suncoast Classic

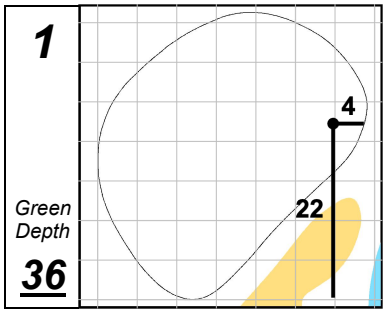

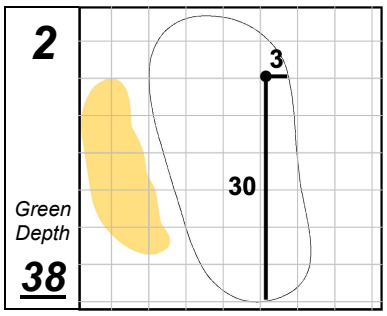

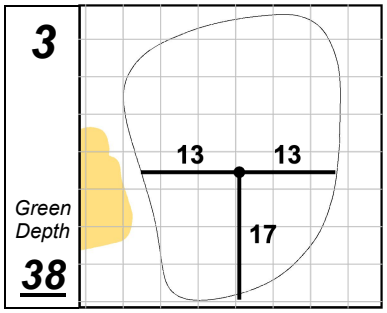

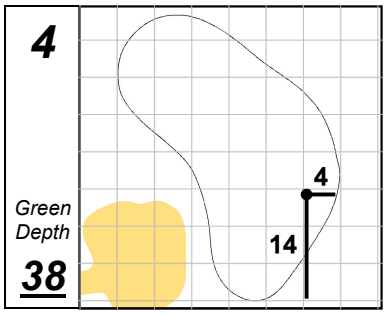

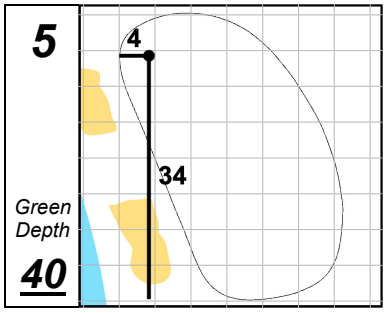

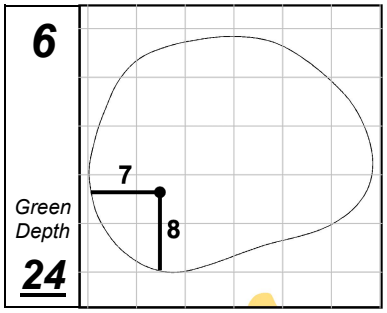

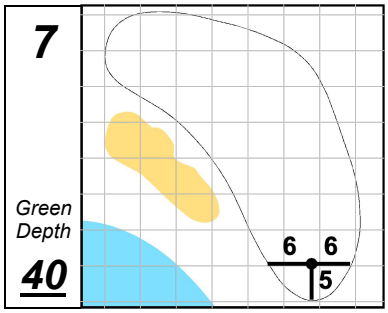

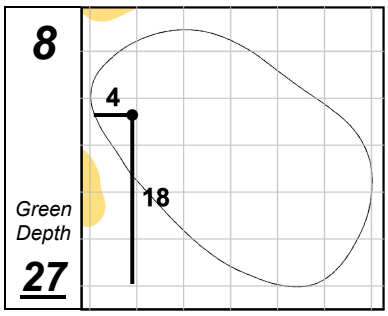

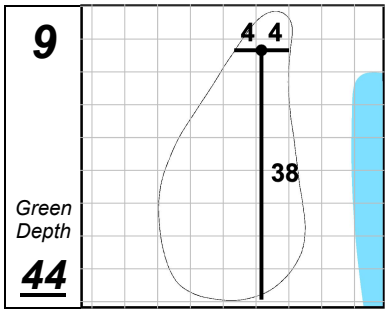

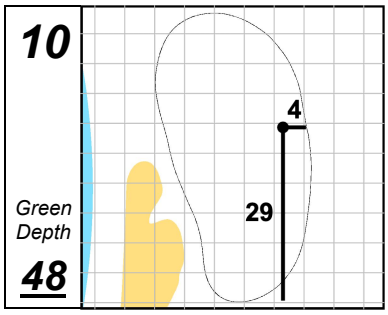

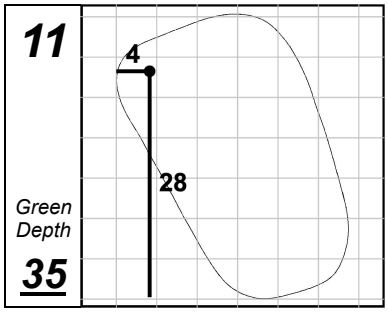

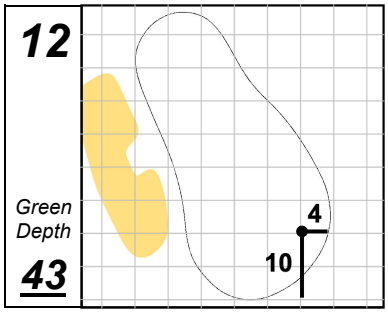

Lakewood National GC Commander

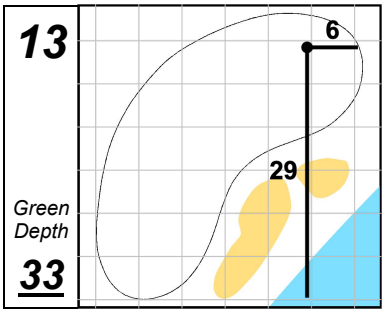

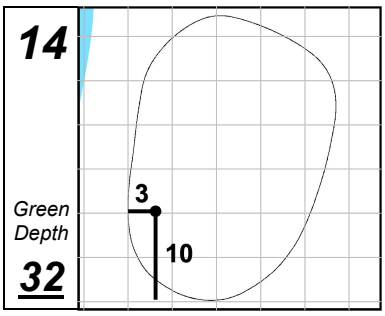

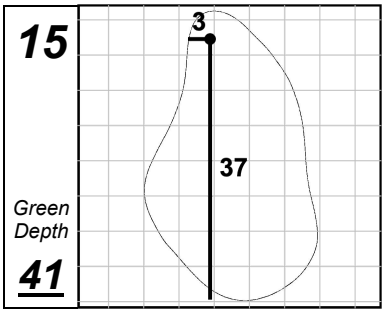

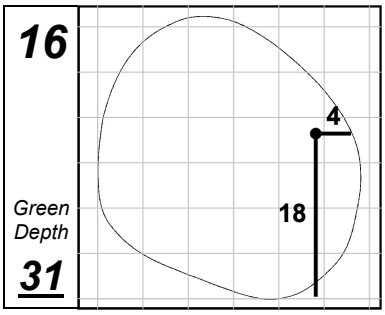

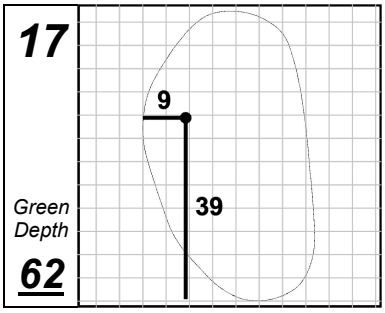

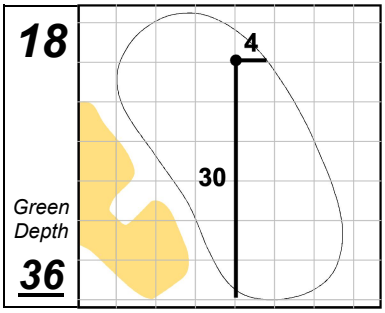

Each side of a complete square on the green represents 5 YARDS.

Saturday, February 19, 2022 1:17:19 PM